Lampa SQ 100

[mm]

A_W =0,25m²

=max.15,0kg

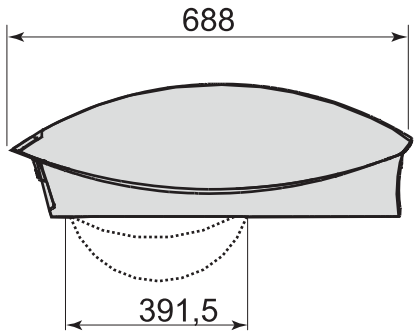

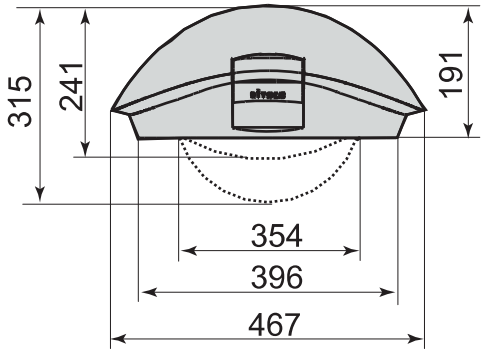

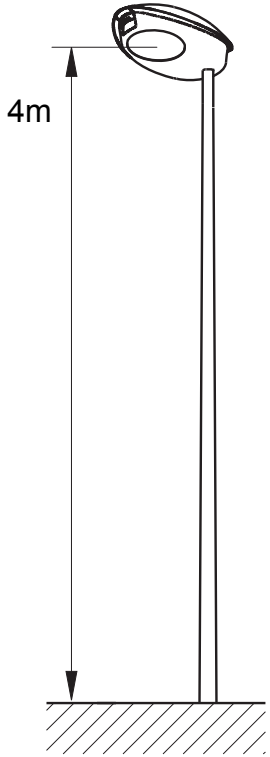

	Aw = 0,14m²
	Aw = 0,12m²
	Aw = 0,11m²